# WIRING DIAGRAMS
## Article Text
1993 Honda Prelude
For Cadi Centre Nsk CA 95051
Copyright © 1998 Mitchell Repair Information Company, LLC
Sunday, July 08, 2001 11:42AM

ARTICLE BEGINNING

**1993 WIRING DIAGRAMS**
**Honda Wiring Diagrams**

**Honda; Prelude**

IDENTIFICATION

COMPONENT LOCATION MENU

**COMPONENT LOCATIONS TABLE**

AAAAAAAAAAAAAAAAAAAAAAAAAAAAAAAAAAAAAAAAAAAAAAAAAAAAAAAAAAAAAAAAAAAAAAAA

| Component | Figure No. (Location) |
|---|---|
| ABS CONTROL UNIT (W/2WS) | 9 (A-B 32) |
| ABS CONTROL UNIT (W/4WS) | 10 (A-C 36) |
| ABS MOTOR | 2 (A 7) |
| ALTERNATOR | 1 (C 3) |
| ANTENNA MOTOR | 16 (A 60) |
| AUTOMATIC TRANSMISSION CONTROL UNIT | 8 (A-C 28) |
| BACK-UP LIGHT SWITCH (MANUAL TRANSMISSION) | 16 (B 61) |
| BATTERY | 1 (A 2) |
| BLOWER MOTOR | 12 (A 47) |
| BRAKE FLUID LEVEL SWITCH | 15 (D 58) |
| BRAKE SWITCH | 10 (D 38) |
| CHIME | 7 (E 24) |
| CIGARETTE LIGHTER & RELAY | 15 (B 59) |
| CLUTCH INTERLOCK SWITCH (MANUAL TRANSMISSION) | 1 (C 3) |
| COMBINATION SWITCH | 13 (A-C 48) |
| COMPRESSOR CLUTCH RELAY | 12 (E 47) |
| CONDENSER FAN RELAY | 12 (B 47) |
| CRUISE CONTROL SYSTEM | 10 (D-E 36-39) |
| DASH FUSE BLOCK (DASH F/B) | 5,6 (A-E 17-22) |
| DASHLIGHT BRIGHTNESS CONTROLLER | 13 (E 51) |
| DATA LINK CONN | 4 (A 15) |
| DISTRIBUTOR ASSEMBLY | 4 (D-E 15) |
| DOME LIGHT | 13 (B 51) |
| DUAL PRESSURE SWITCH | 12 (B 45) |
| EGR CONTROL SOLENOID | 4 (C 15) |
| EGR VALVE LIFT SENSOR | 3 (A 9) |
| ENGINE CONTROL MODULE (ECM) | 3 (A-E 8) |
| FAIL SAFE RELAY (W/ 2WS) | 9 (B 35) |
| FAIL SAFE RELAY (W/ 4WS) | 10 (B 39) |
| FAN TIMER UNIT | 12 (C 47) |
| FOG LIGHT RELAY | 1 (D 3) |
| FOG LIGHT SWITCH | 13 (D 48) |

FRONT MAIN STEERING ANGLE SENSOR ..... 11 (A 43)
FUEL PUMP ..... 3 (E 11)
FUEL TANK UNIT ..... 14 (C 55)
FUNCTION CONTROL MOTOR ..... 12 (D 47)
GEAR SELECT SWITCH (AUTOMATIC TRANSMISSION) ..... 8 (A-C 31)
HAZARD SWITCH ..... 13 (C 48)
HEATER CONTROL PANEL ..... 12 (A-E 44)
HORN RELAY ..... 9 (E 35)
IGNITION COIL ..... 4 (E 15)
IGNITION KEY LIGHT ..... 7 (E 27)
IGNITION KEY SWITCH ..... 7 (E 27)
IGNITION SWITCH ..... 6 (D-E 23)
INTEGRATED CONTROL UNIT ..... 7 (A-C 24-27)
INTERMITTENT WIPER RELAY ..... 11 (E 43)
JUNCTION CONNECTOR C131 ..... 3 (D 11)
JUNCTION CONNECTOR C326 ..... 11 (D-E 40)
JUNCTION CONNECTOR C419 ..... 8 (C-E 31)
JUNCTION CONNECTOR C447 ..... 15 (C 59)
JUNCTION CONNECTOR C460 ..... 10 (E 39)
JUNCTION CONNECTOR C507 (W/ 2WS) ..... 9 (C 35)
JUNCTION CONNECTOR C507 (W/ 4WS) ..... 10 (C 39)
JUNCTION CONNECTOR C534 ..... 13 (A 51)
JUNCTION CONNECTOR C609 ..... 13 (D-E 48)
JUNCTION CONNECTOR C619 ..... 13 (C 51)
KEY INTERLOCK SWITCH ..... 8 (E 28)
LEFT BRAKE LIGHT SENSOR ..... 16 (E 63)
LEFT SEAT BELT SWITCH ..... 7 (E 27)
MAIN INSTRUMENT CLUSTER ..... 14 (A-B 52)
PGM-FI MAIN RELAY ..... 3 (E 11)
POWER DOOR LOCKS ..... 15 (D-E 56-59)
POWER MIRROR SWITCH ..... 16 (D 60)
POWER WINDOWS ..... 15 (A-C 56-59)
RADIATOR FAN MOTOR ..... 2 (E 7)
REAR MAIN STEERING ANGLE SENSOR ..... 11 (A 43)
RECIRC CONTROL MOTOR ..... 12 (E 47)
RIGHT BRAKE LIGHT SENSOR ..... 16 (A 63)
SERVICE CHECK CONNECTOR ..... 4 (A 15)
SRS CONTROL UNIT ..... 9 (D 32)
SRS FUSE BLOCK ..... 6 (D 22)
STARTER ..... 1 (A 3)
STARTER CUT RELAY (MANUAL TRANSMISSION) ..... 1 (B 3)
STEERING WHEEL ..... 9 (D-E 35)
SUB INSTRUMENT CLUSTER ..... 14 (C-E 52)
SUNROOF SWITCH ..... 13 (D 51)
TEMPERATURE SWITCHES ..... 12 (C 47)
THROTTLE ANGLE SENSOR ..... 3 (A 10)
TRUNK LATCH SWITCH ..... 13 (B 51)
UNDERHOOD FUSE BLOCK (U/H F/B) ..... 2 (B-D 4-7)

WIRING DIAGR

VEHICLE SPEED SENSOR ..... 3 (A 8)
VTEC PRESSURE SWITCH ..... 3 (D 8)
WASHER MOTOR ..... 11 (E 40)
WIPER/WASHER SWITCH ..... 11 (C-D 43)
4WS CONTROL UNIT ..... 11 (A-C 40)
AAAAAAAAAAAAAAAAAAAAAAAAAAAAAAAAAAAAAAAAAAAAAAAAAAAAAAAAAAAAAAAAAAAAAAAA

## GROUND LOCATION MENU

GROUND LOCATIONS TABLE
AAAAAAAAAAAAAAAAAAAAAAAAAAAAAAAAAAAAAAAAAAAAAAAAAAAAAAAAAAAAAAAAAAAAAAAA

| Component | Figure No. (Location) |
|---|---|
| GROUND A: (RIGHT FRONT OF ENGINE COMPARTMENT) | 1 (A 2) |
| GROUND B: (ON TRANSMISSION CASE) | 1 (B 2) |
| GROUND C: (LEFT SIDE OF ENGINE COMPARTMENT) | 1 (B 2) |
| GROUND D: (ENGINE MOUNT BRACKET) | 1 (C 2) |
| GROUND E: (VALVE COVER) | 1 (C 2) |
| GROUND F: (RIGHT FRONT CORNER OF ENGINE COMPARTMENT) | 1 (D 3) |
| GROUND G: (LEFT FRONT CORNER OF ENGINE COMPARTMENT) | 1 (E 3) |
| GROUND H: (BELOW CENTER OF DASH) | 2 (A 7) |
| GROUND I: (RIGHT SIDE OF ENGINE) | 4 (E 13) |
| GROUND J: (RIGHT REAR CORNER OF CEILING) | 6 (B 23) |
| GROUND K: (BEHIND FRONT CONSOLE) | 8 (E 30) |
| GROUND L: (BEHIND RIGHT SIDE OF DASH) | 8 (E 31) |
| GROUND M: (BELOW CENTER OF DASH) | 9 (E 32) |
| GROUND N: (RIGHT KICK PANEL) | 11 (C 41) |
| GROUND O: (BEHIND LEFT REAR SEAT) | 11 (C 41) |
| GROUND P: (RIGHT QUARTER PANEL AREA) | 11 (C 41) |
| GROUND Q: (BEHIND LEFT REAR SEAT) | 11 (C 41) |
| GROUND R: (CENTER OF REAR STEERING ACTUATOR) | 11 (D 41) |
| GROUND S: (BEHIND LEFT SIDE OF FRONT CONSOLE) | 12 (A 45) |
| GROUND T: (LEFT FRONT OF ENGINE COMPARTMENT) | 12 (B 47) |
| GROUND U: (LEFT SIDE OF FLOOR) | 13 (A 49) |
| GROUND V: (LEFT QUARTER PANEL AREA) | 13 (B 49) |
| GROUND W: (CENTER REAR OF TRUNK) | 16 (C 62) |

AAAAAAAAAAAAAAAAAAAAAAAAAAAAAAAAAAAAAAAAAAAAAAAAAAAAAAAAAAAAAAAAAAAAAAAA

## WIRING DIAGRAMS

**COMPONENT LOCATOR:**

| | |
|---|---|
| A/T CONTROL UNIT | A–C 28 |
| ABS CONTROL UNIT (W/ 2WS) | A–B 32 |
| ABS CONTROL UNIT (W/ 4WS) | A–C 36 |
| ABS MOTOR | A 7 |
| ALTERNATOR | C 3 |
| ANTENNA MOTOR | A 60 |
| BACK-UP LT SW (M/T) | B 61 |
| BATTERY | A 2 |
| BLOWER MOTOR | A 47 |
| BRAKE FLUID LEVEL SW | D 58 |
| BRAKE SW | D 38 |
| CHIME | E 24 |
| CIG LIGHTER & RELAY | B 59 |
| CLUTCH INTERLOCK SW (M/T) | C 3 |
| COMBINATION SW | A–C 48 |
| COMP CLUTCH RELAY | E 47 |
| CONDENSER FAN RELAY | B 47 |
| CRUISE CONTROL SYSTEM | D–E 36–39 |
| DASH FUSE BLOCK (DASH F/B) | A–E 17–22 |
| DASHLIGHT BRIGHTNESS CONTROLLER | E 51 |
| DATA LINK CONN | A 15 |
| DISTRIBUTOR ASSEMBLY | D–E 15 |
| DOME LT | B 51 |
| DUAL PRES SW | B 45 |
| EGR CONTROL SOLENOID | C 15 |
| EGR VALVE LIFT SENSOR | A 9 |
| ENGINE CONTROL MODULE (ECM) | A–E 8 |
| FAIL SAFE RELAY (W/ 2WS) | B 35 |
| FAIL SAFE RELAY (W/ 4WS) | B 39 |
| FAN TIMER UNIT | C 47 |
| FOG LT RELAY | D 3 |
| FOG LT SW | D 48 |
| FRONT MAIN STEERING ANGLE SENSOR | A 43 |
| FUEL PUMP | E 11 |
| FUEL TANK UNIT | C 55 |
| FUNCTION CONTROL MOTOR | D 47 |
| GEAR SELECT SW (A/T) | A–C 31 |
| GROUND A | A 2 |
| GROUND B | B 2 |
| GROUND C | B 2 |
| GROUND D | C 2 |
| GROUND E | C 2 |
| GROUND F | D 3 |
| GROUND G | E 3 |
| GROUND H | A 7 |
| GROUND I | E 13 |
| GROUND J | B 23 |
| GROUND K | E 20 |
| GROUND L | E 31 |
| GROUND M | F 32 |
| GROUND N | C 41 |
| GROUND O | C 41 |
| GROUND P | C 41 |
| GROUND Q | C 41 |
| GROUND R | D 41 |
| GROUND S | A 45 |
| GROUND T | B 47 |
| GROUND U | A 49 |
| GROUND V | B 49 |
| GROUND W | C 62 |
| HAZARD SW | C 48 |
| HEATER CONTROL PANEL | A–E 44 |
| HORN RELAY | E 35 |
| IGNITION COIL | E 15 |
| IGNITION KEY LT | E 27 |
| IGNITION KEY SW | E 27 |
| IGNITION SW | D–E 23 |
| INTEGRATED CONTROL UNIT | A–C 24–27 |
| INTERMITTENT WIPER RELAY | E 43 |
| JUNCTION CONN C131 | D 11 |
| JUNCTION CONN C326 | D–E 40 |
| JUNCTION CONN C419 | C–E 31 |
| JUNCTION CONN C447 | C 59 |
| JUNCTION CONN C460 | E 39 |
| JUNCTION CONN C507 (W/ 2WS) | C 35 |
| JUNCTION CONN C507 (W/ 4WS) | C 39 |
| JUNCTION CONN C534 | A 51 |
| JUNCTION CONN C609 | D–E 48 |
| JUNCTION CONN C619 | C 51 |
| KEY INTERLOCK SW | E 28 |
| LEFT BRAKE LT SENSOR | E 63 |
| LEFT SEAT BELT SW | E 27 |
| MAIN INSTRUMENT CLUSTER | A–B 52 |
| PGM-FI MAIN RELAY | E 11 |
| POWER DOOR LOCKS | D–E 56–59 |
| POWER MIRROR SW | D 60 |
| POWER WINDOWS | A–C 56–59 |
| RADIATOR FAN MOTOR | E 7 |
| REAR MAIN STEERING ANGLE SENSOR | A 43 |
| RECIRC CONTROL MOTOR | E 47 |
| RIGHT BRAKE LT SENSOR | A 63 |
| SERVICE CHECK CONN | A 15 |
| SRS CONTROL UNIT | D 32 |
| SRS FUSE BLOCK | D 22 |
| STARTER | A 3 |
| STARTER CUT RELAY (M/T) | B 3 |
| STEERING WHEEL | D–E 35 |
| SUB INSTRUMENT CLUSTER | C–E 52 |
| SUNROOF SW | D 51 |
| TEMP SW | C 47 |
| THROTTLE ANGLE SENSOR | A 10 |
| TRUNK LATCH SW | B 51 |
| UNDERHOOD FUSE BLOCK (U/H F/B) | B–D 4–7 |
| VEHICLE SPEED SENSOR | A 8 |
| VTEC PRES SW | D 8 |
| WASHER MOTOR | E 40 |
| WIPER/WASHER SW | C–D 43 |
| 4WS CONTROL UNIT | A–C 40 |

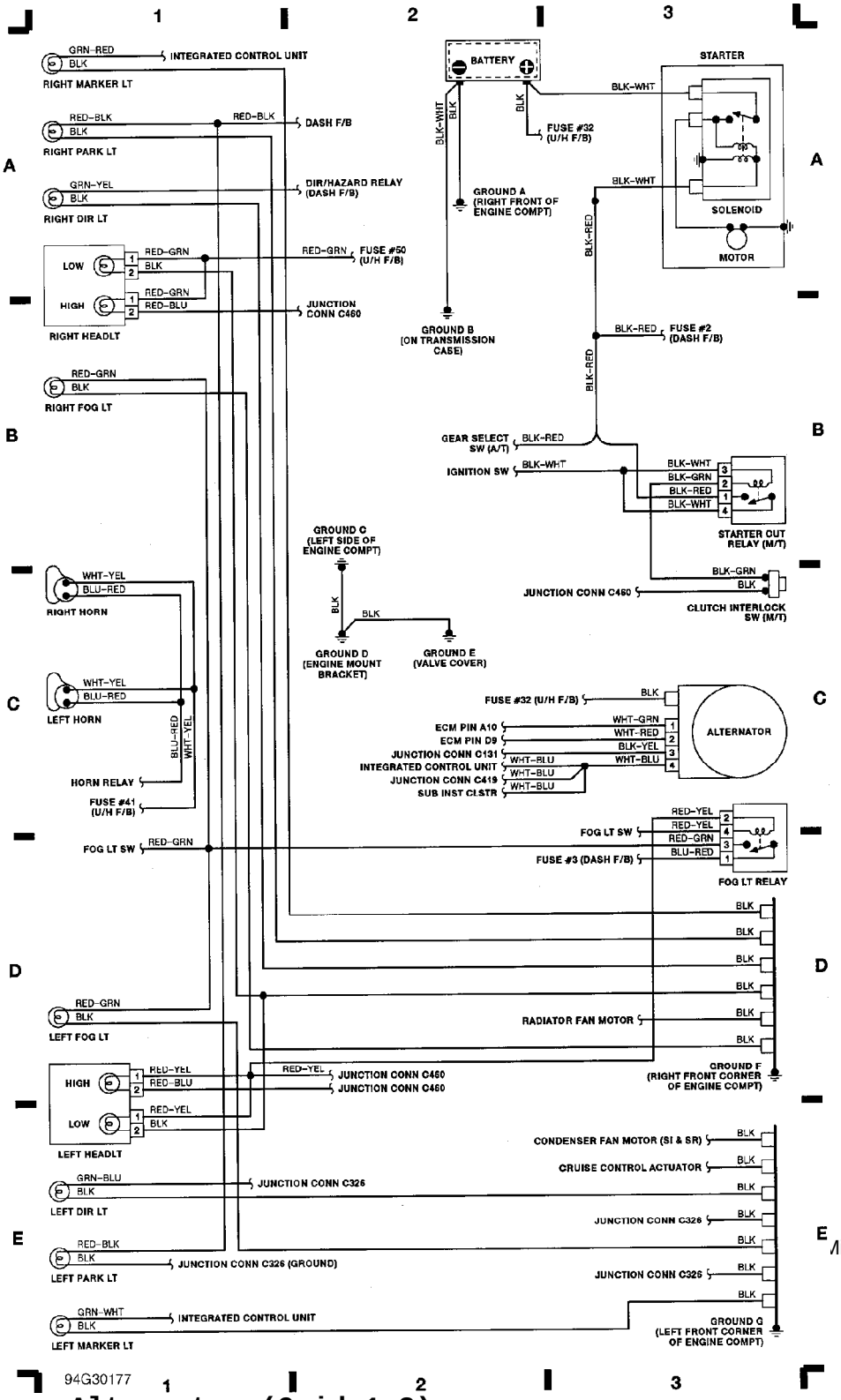


**WIRING DIAG**

Mitchell

Fig. 1: Battery, Starter, Alternator (Grid 1-3)

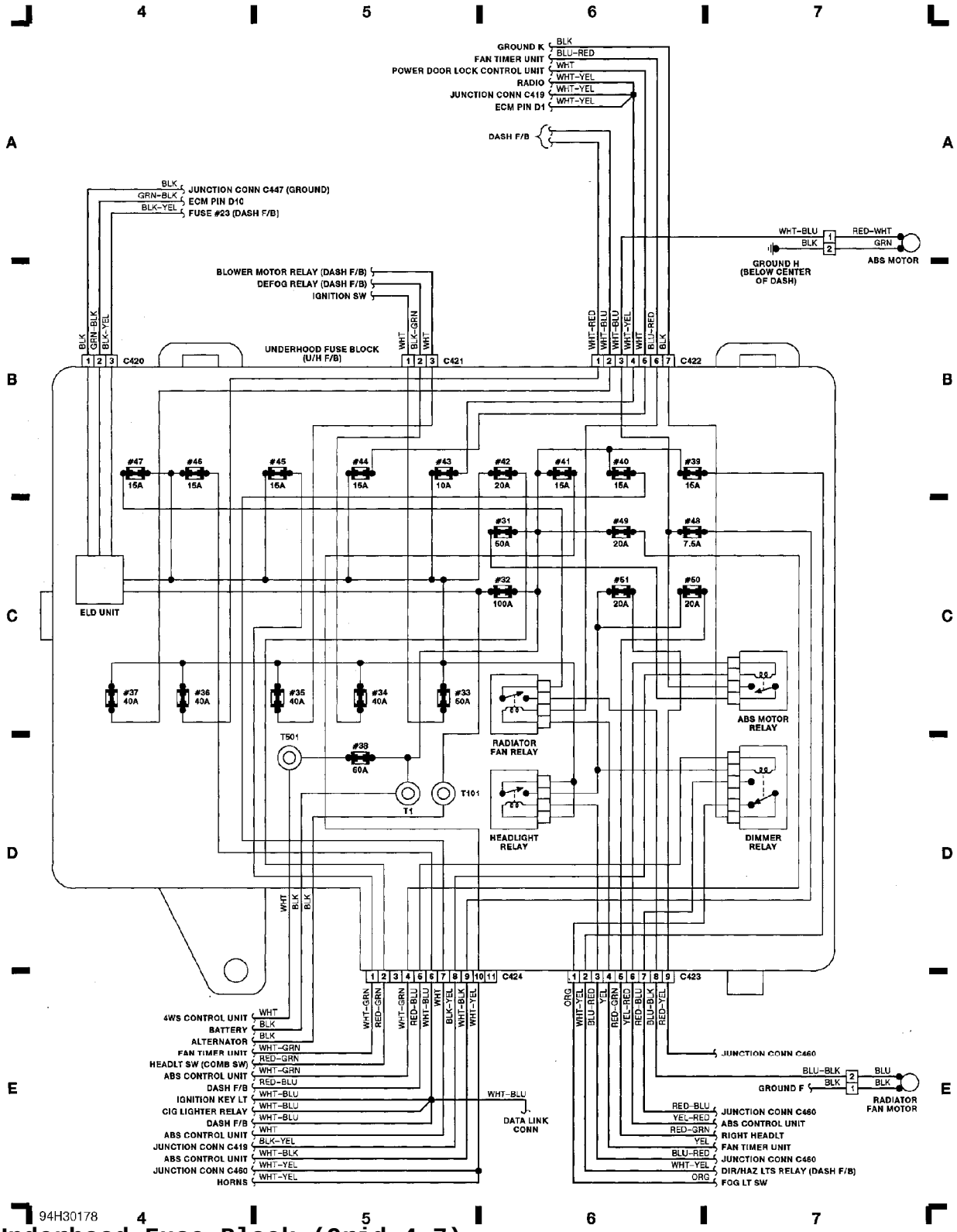


**Fig. 2: Underhood Fuse Block (Grid 4-7)**

 Copyright © 1998 Mitchell

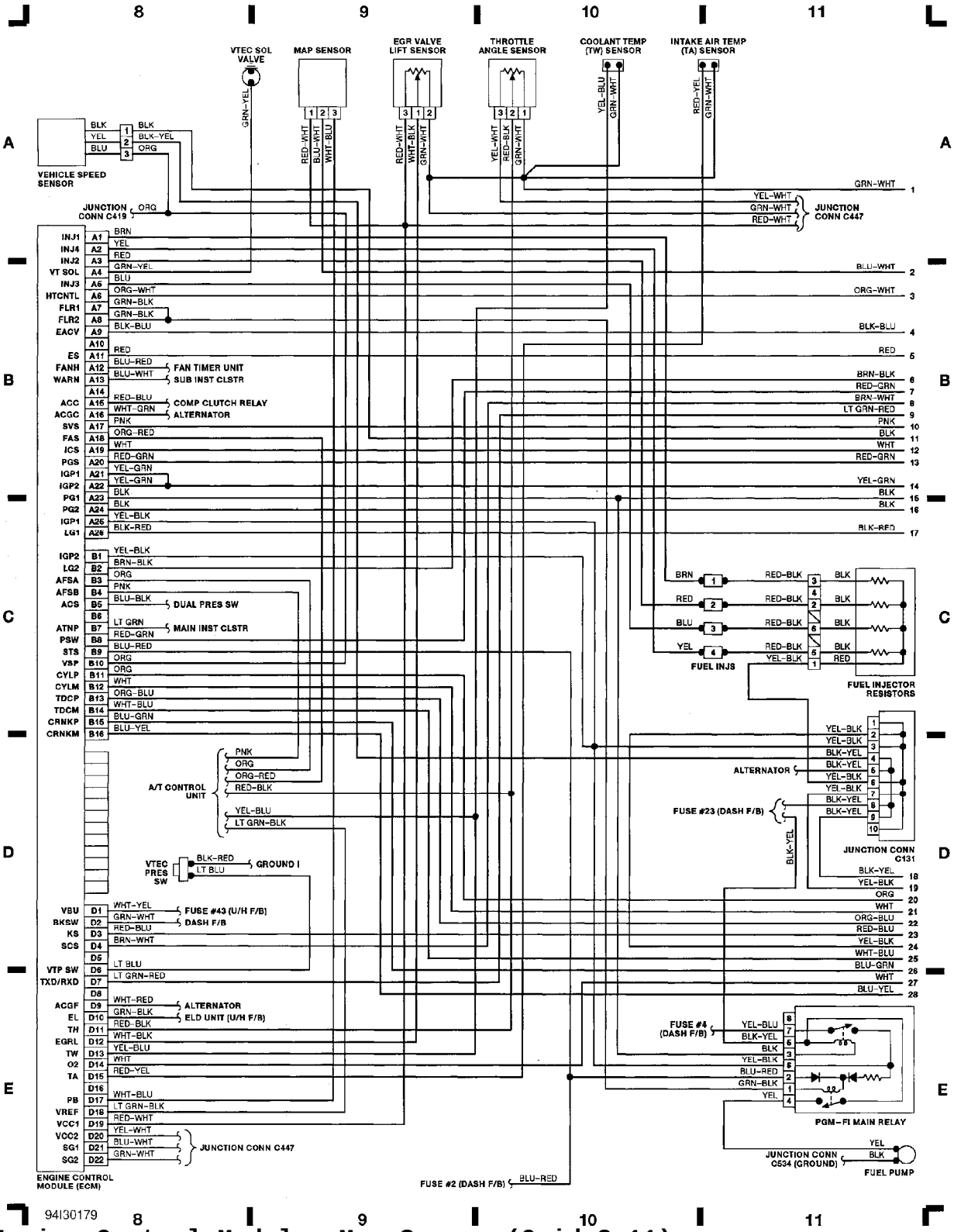


**Fig. 3: Engine Control Module, Map Sensor (Grid 8-11)**


Copyright © 1998 Mitchell

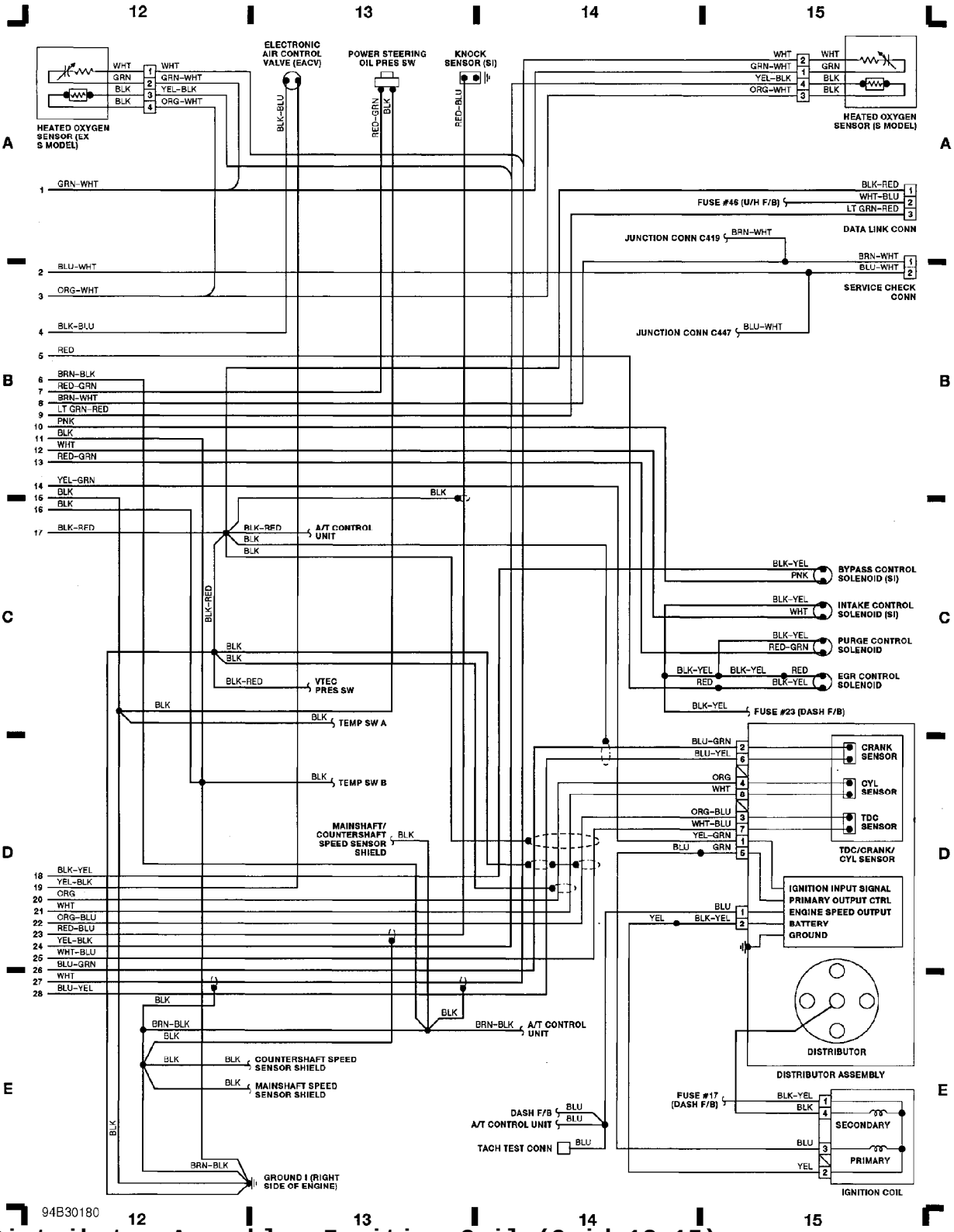


**Fig. 4: Distributor Assembly, Ignition Coil (Grid 12-15)**

 Copyright © 1998 Mitchell

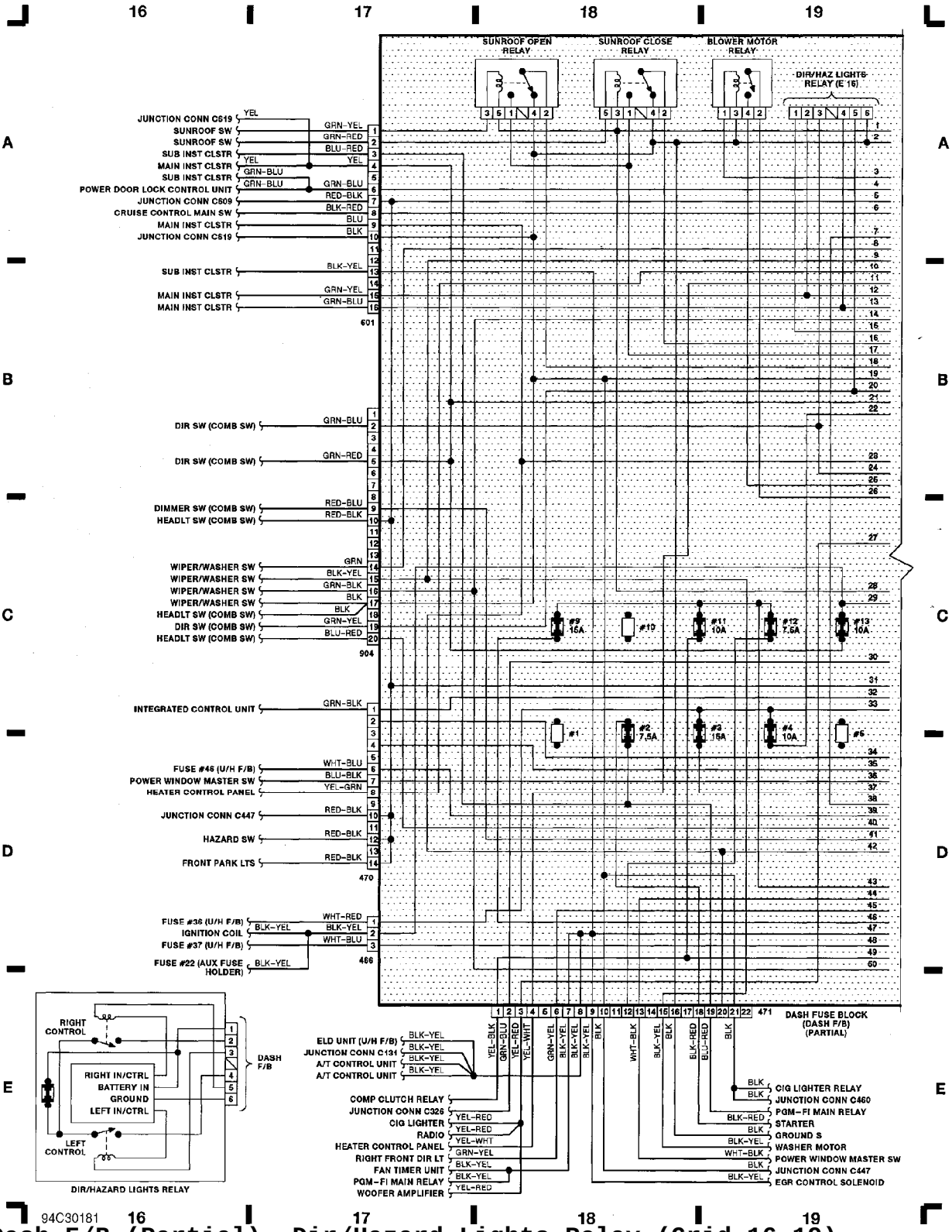


**Fig. 5: Dash F/B (Partial), Dir/Hazard Lights Relay (Grid 16-19)**

 Copyright © 1998 Mitchell

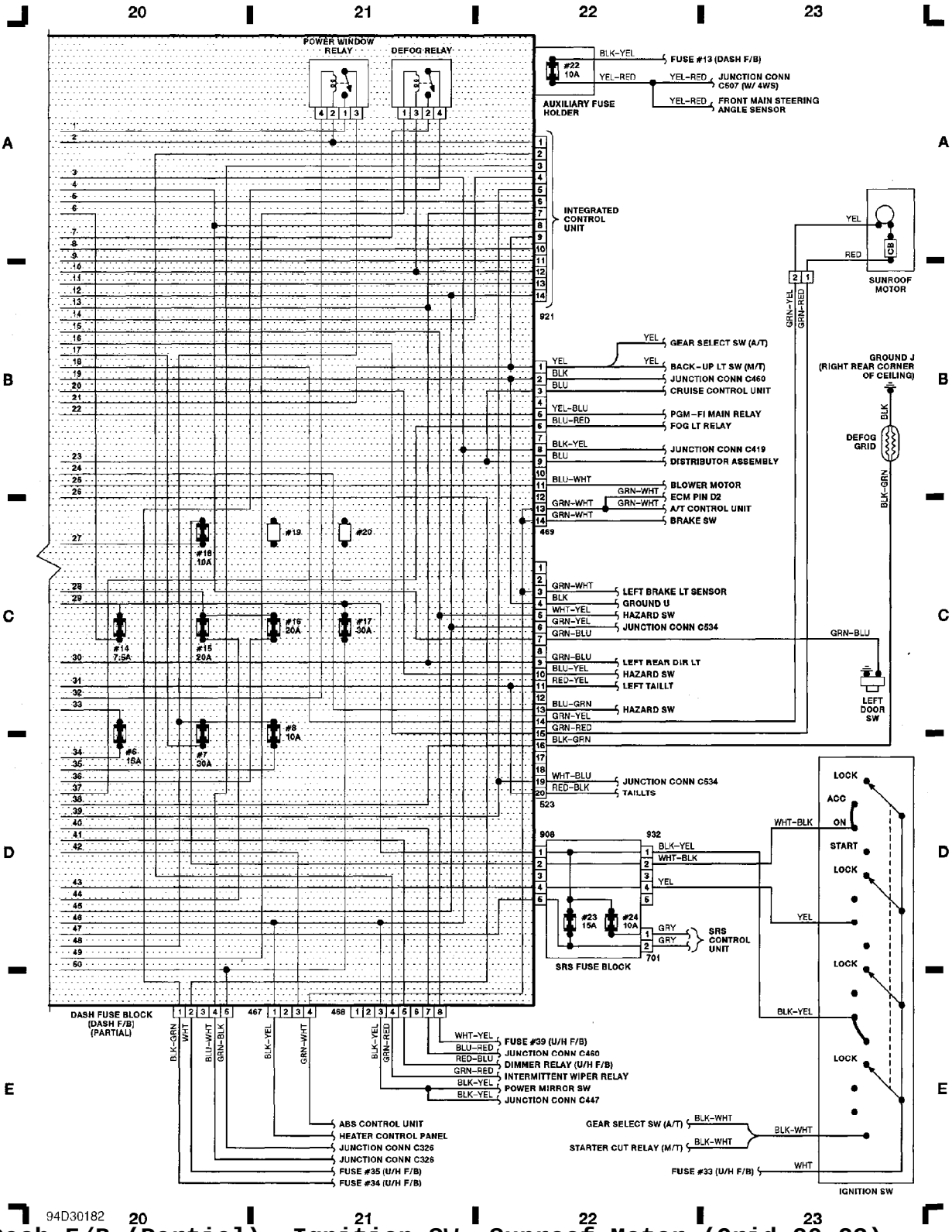


**Fig. 6: Dash F/B (Partial), Ignition SW, Sunroof Motor (Grid 20-23)**

 Copyright © 1998 Mitchell

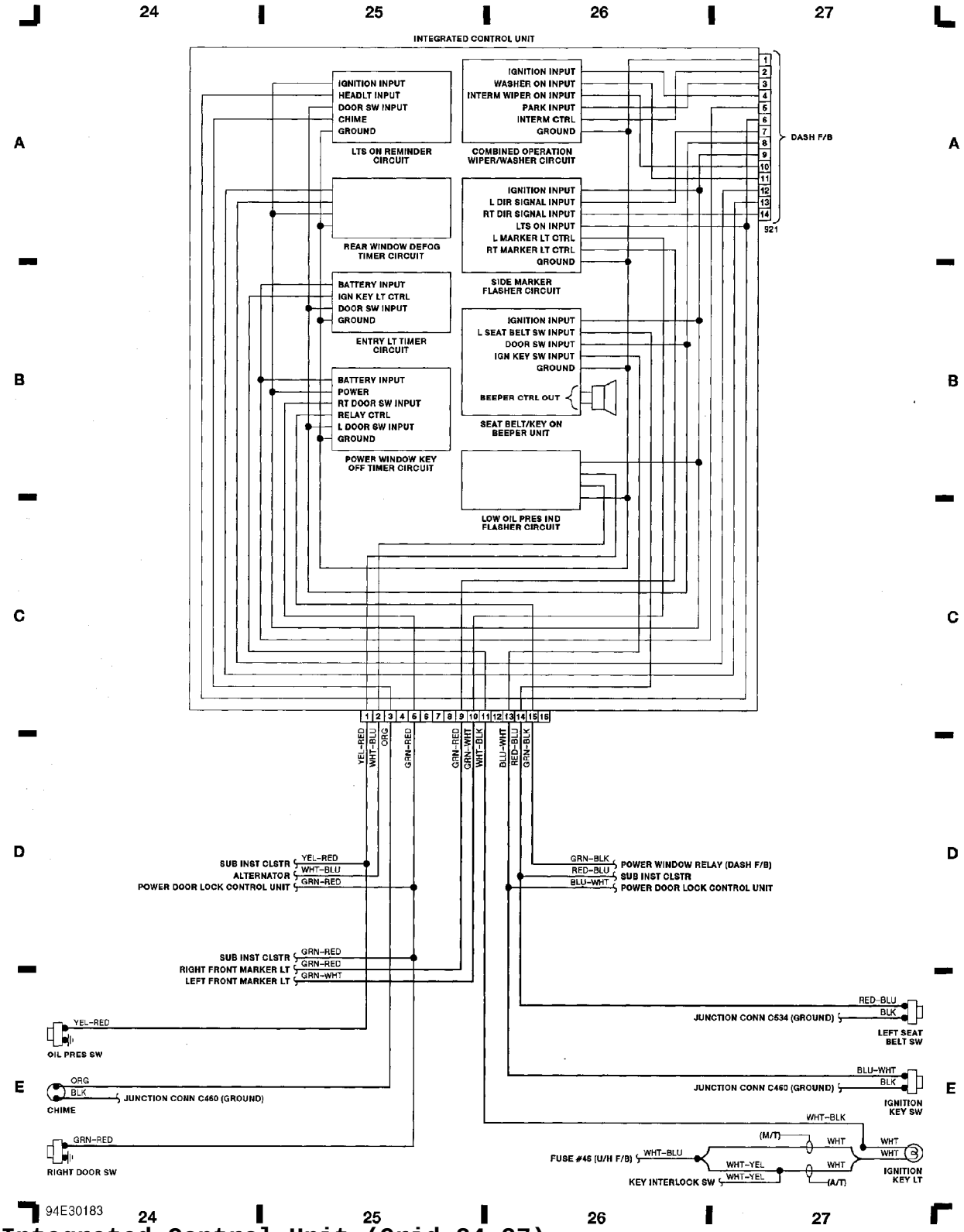


**Fig. 7: Integrated Control Unit (Grid 24-27)**


Copyright © 1998 Mitche

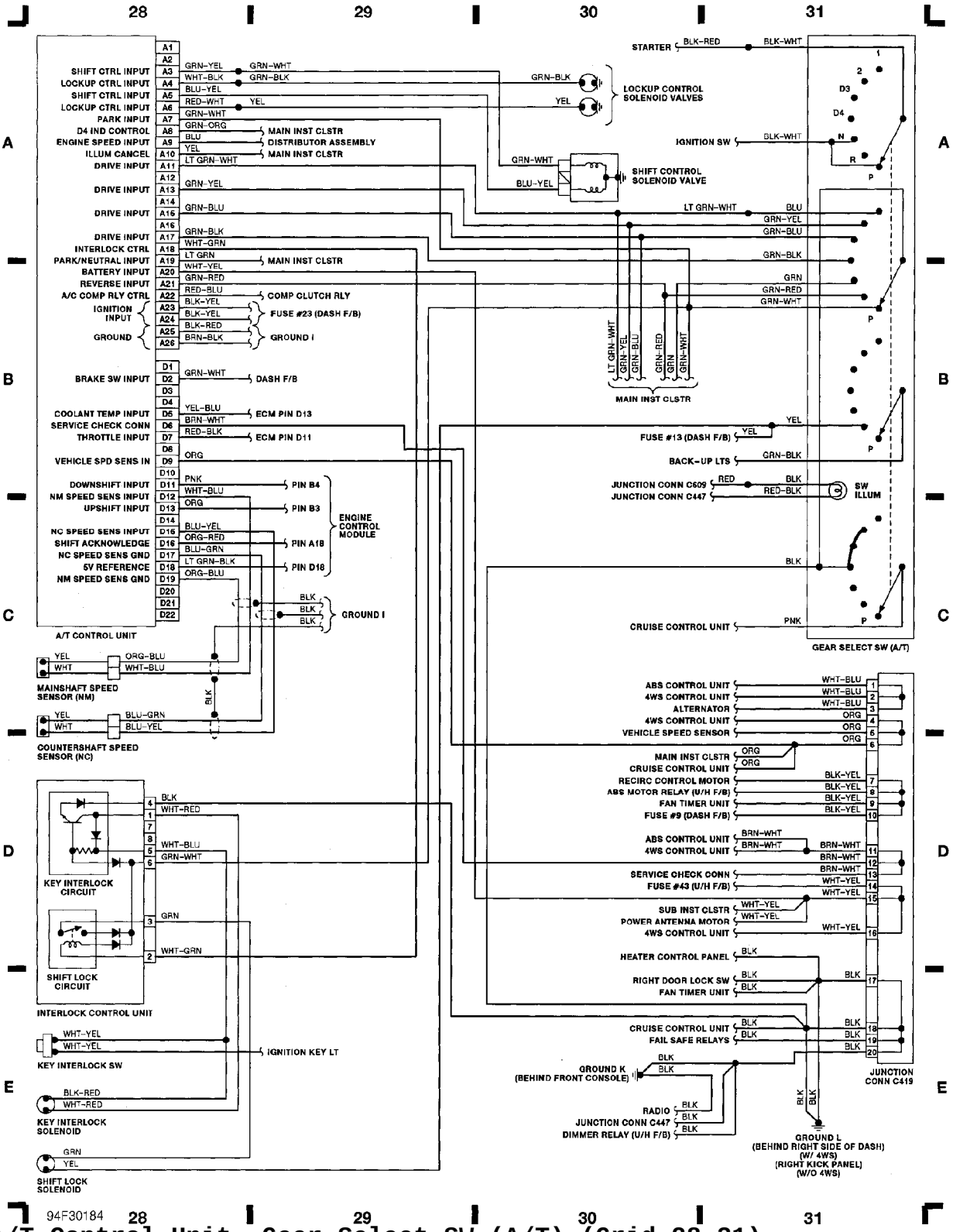


**Fig. 8: A/T Control Unit, Gear Select SW (A/T) (Grid 28-31)**

 Copyright © 1998 Mitche

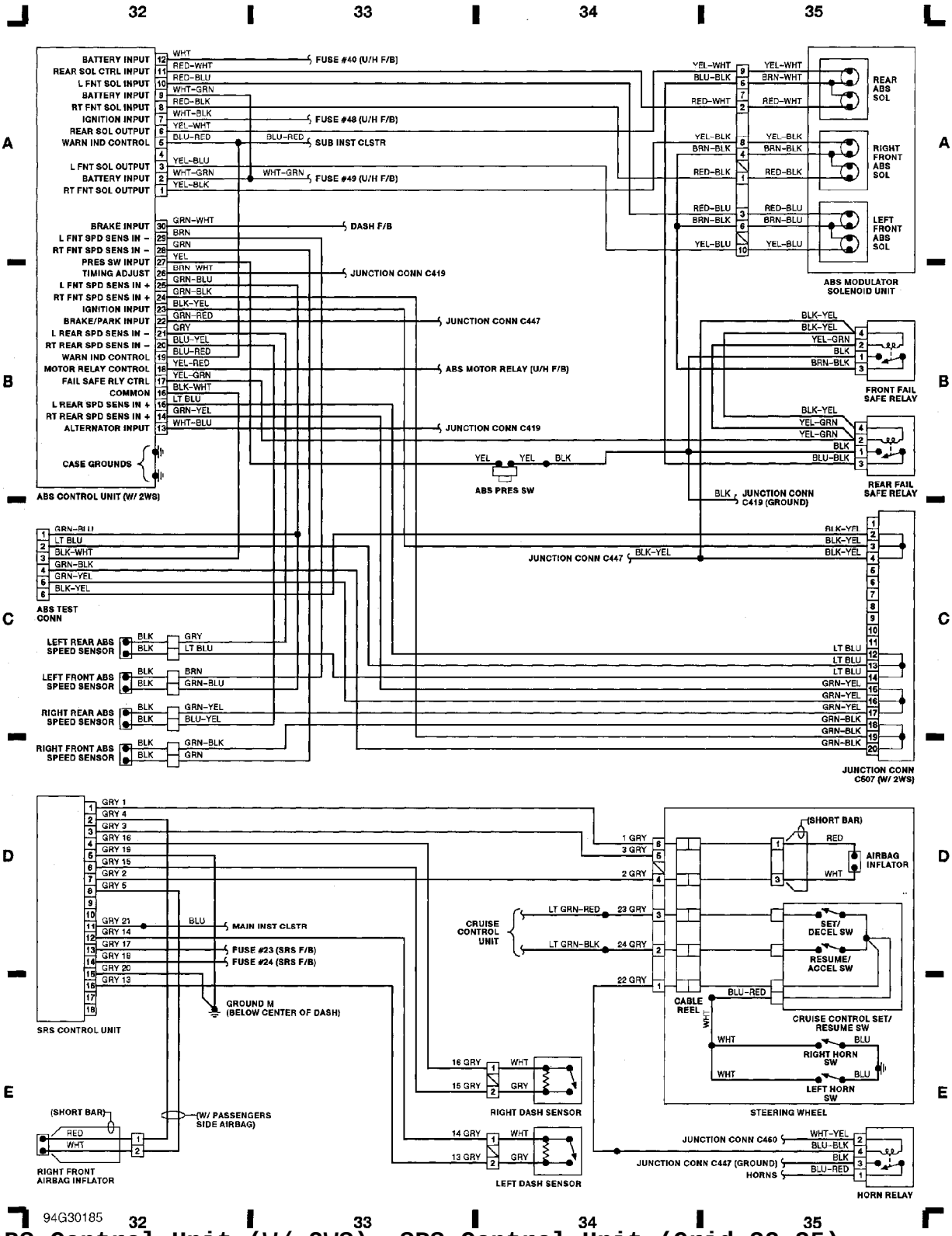


**Fig. 9: ABS Control Unit (W/ 2WS), SRS Control Unit (Grid 32-35)**

 Copyright © 1998 Mitche

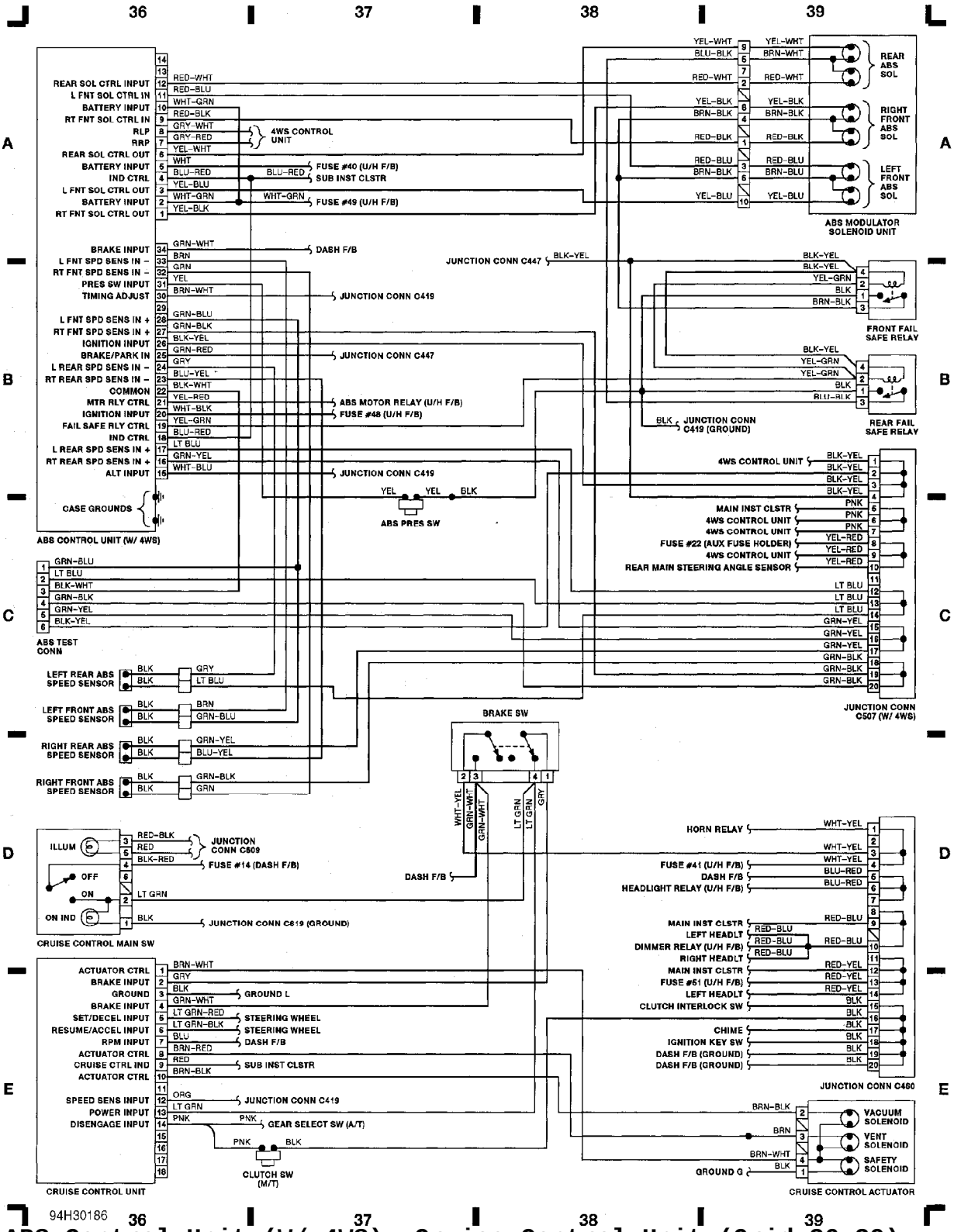


**Fig. 10: ABS Control Unit (W/ 4WS), Cruise Control Unit (Grid 36-39)**

 Copyright © 1998 Mitche

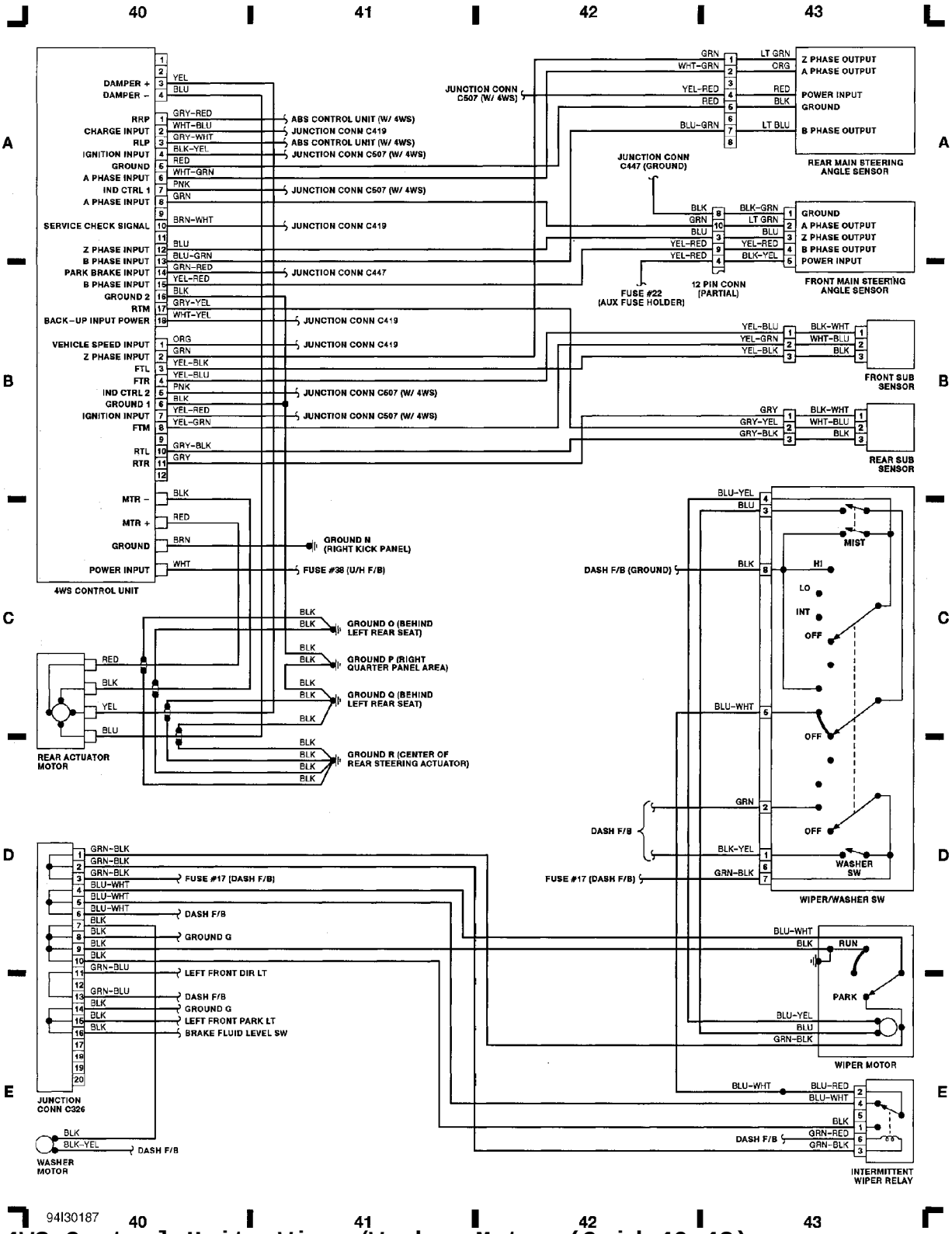


**Fig. 11: 4WS Control Unit, Wiper/Washer Motor (Grid 40-43)**


Copyright © 1998 Mitche

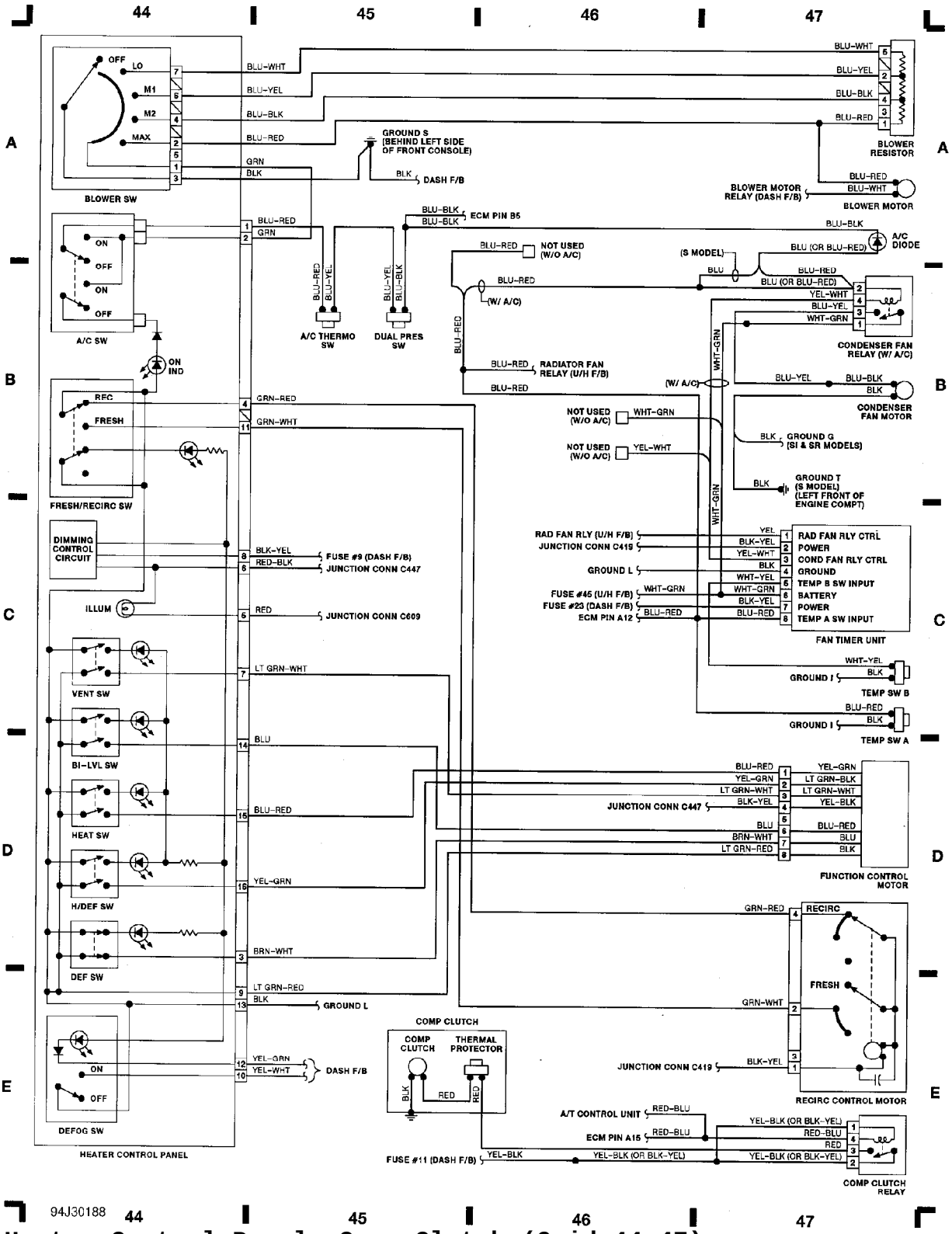


**Fig. 12: Heater Control Panel, Comp Clutch (Grid 44-47)**

 Copyright © 1998 Mitche

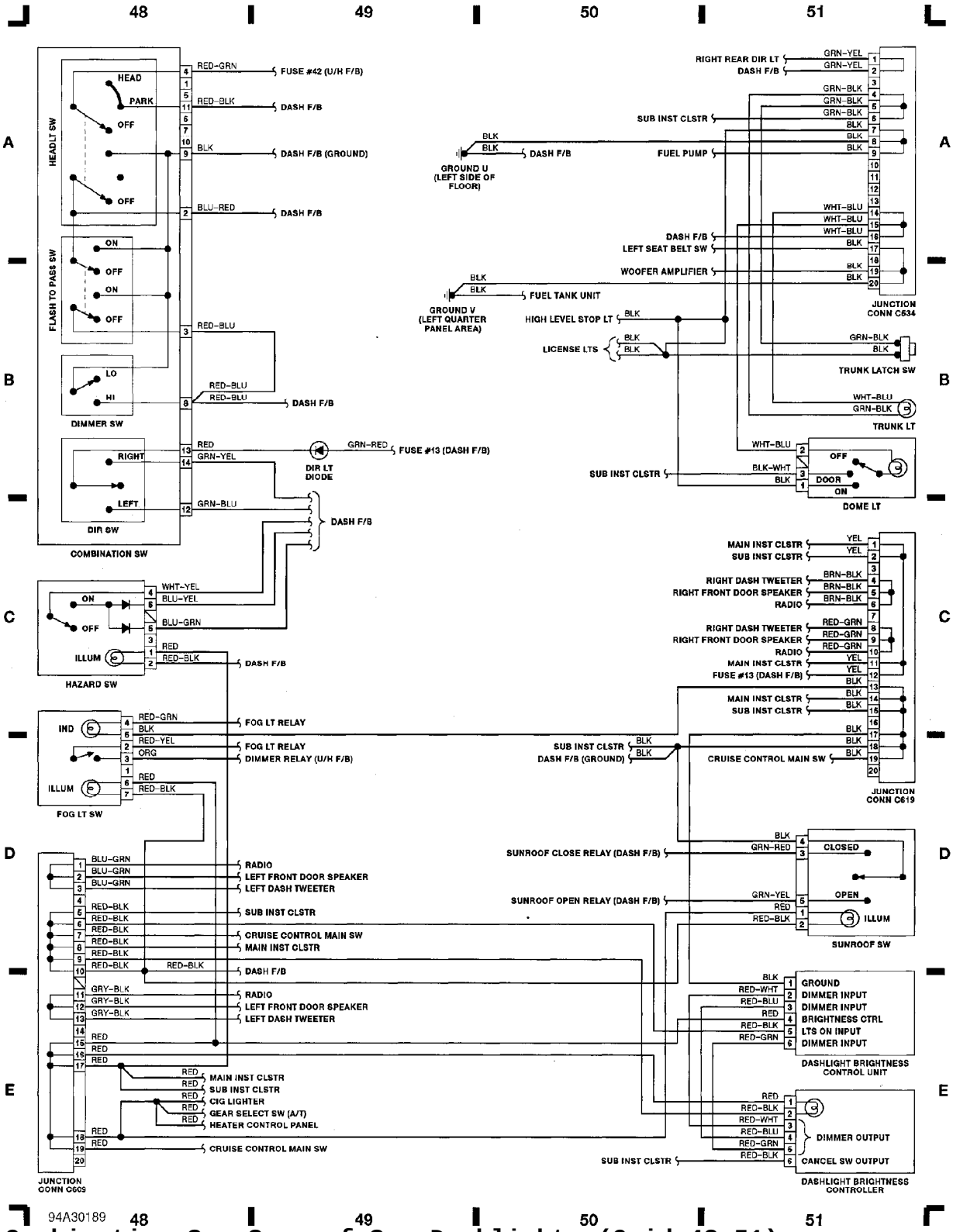


**Fig. 13: Combination Sw, Sunroof Sw, Dashlights (Grid 48-51)**


Copyright © 1998 Mitche

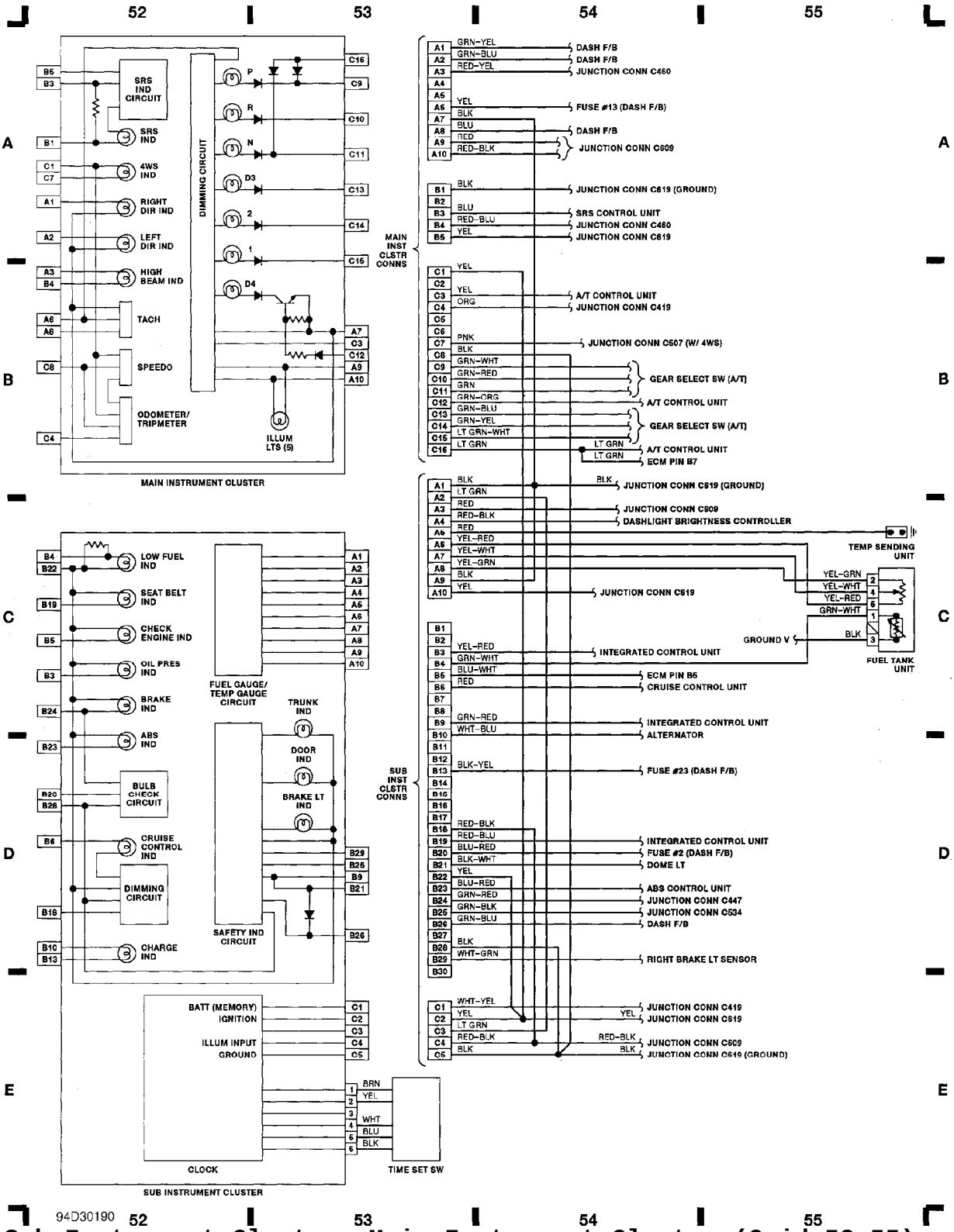


**Fig. 14: Sub Instrument Cluster, Main Instrument Cluster (Grid 52-55)**


Copyright © 1998 Mitche

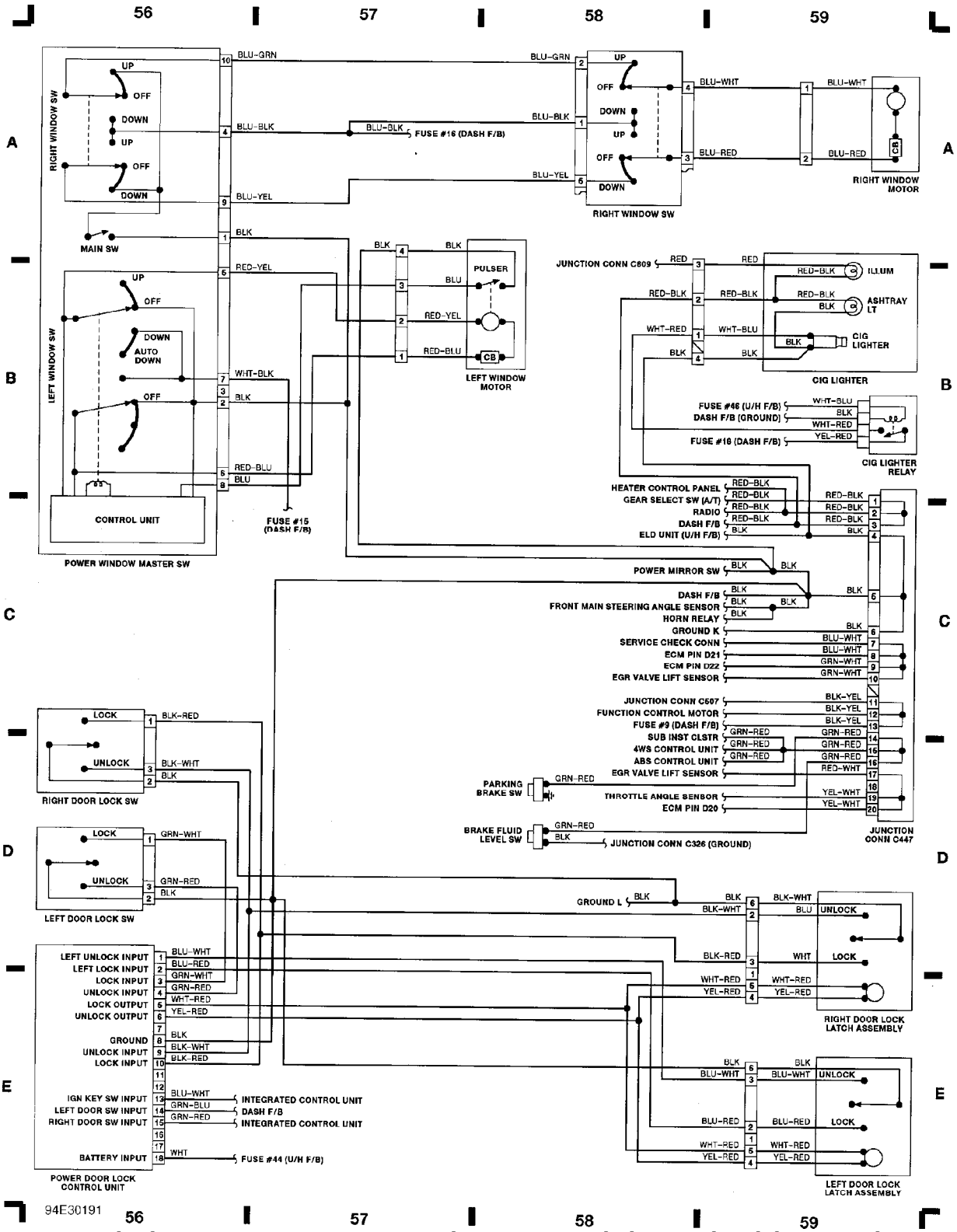


**Fig. 15: Power Windows, Power Doors, Cigarette Lighter (Grid 56-59)**

 Copyright © 1998 Mitche

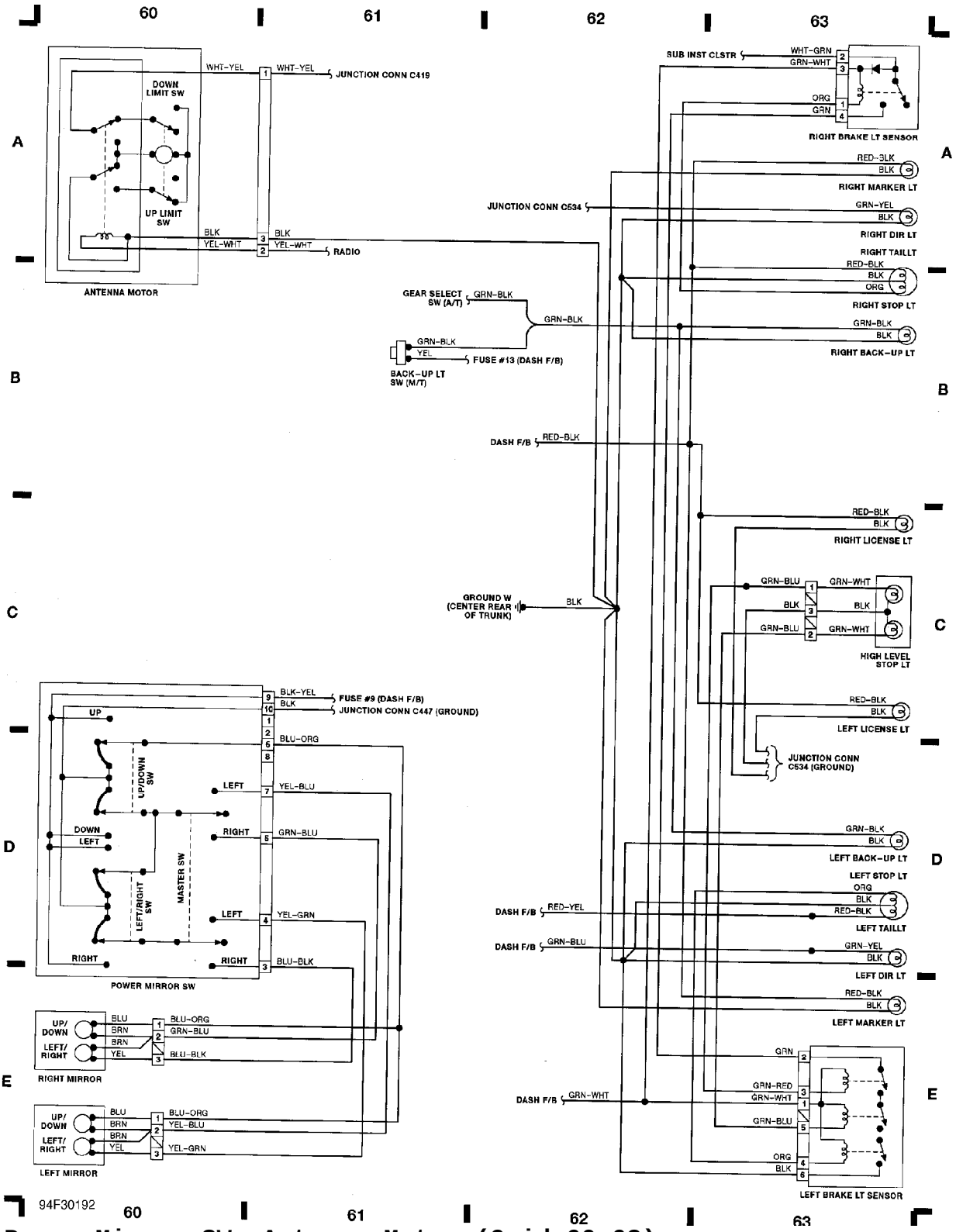


**Fig. 16: Power Mirror SW, Antenna Motor (Grid 60-63)**

 Copyright © 1998 Mitche

**END OF ARTICLE**