A/C SYSTEM GENERAL SERVICING
Article Text
1993 Honda Prelude
For Cadi Centre Nsk CA 95051
Copyright © 1998 Mitchell Repair Information Company, LLC
Sunday, July 08, 2001 11:18AM

ARTICLE BEGINNING

1993 GENERAL SERVICING
General Servicing Procedures

USING R-12 & R-134a REFRIGERANT

HANDLING/SAFETY PRECAUTIONS

1) Always work in a well-ventilated, clean area. Refrigerant R-134a is colorless and is invisible as a gas. Refrigerant (R-12 or R-134a) is heavier than oxygen and will displace oxygen in a confined area. Avoid breathing refrigerant vapors. Exposure may irritate eyes, nose and throat.

2) The system's high pressure can cause severe injury to eyes and skin if a hose were to burst. Always wear eye protection when working around A/C system and refrigerant. If necessary, wear rubber gloves or other protective clothing.

3) Refrigerant evaporates quickly when exposed to atmosphere, freezing anything it contacts. If liquid refrigerant contacts eyes or skin, DO NOT rub eyes or skin. Immediately flush affected area with cool water for 15 minutes and consult a doctor or hospital.

4) Never use R-134a in combination with compressed air for leak testing. Pressurized R-134a in the presence of oxygen (air concentrations greater than 60% by volume) may form a combustible mixture. DO NOT introduce compressed air into R-134a containers (full or empty), A/C system components or service equipment.

5) DO NOT expose A/C system components to high temperatures, steam cleaning for example, as excessive heat will cause refrigerant/system pressure to increase. Never expose refrigerant directly to open flame. If refrigerant needs to be warmed, place bottom of refrigerant tank in warm water. Water temperature MUST NOT exceed 125oF (52oC).

6) Use care when handling refrigerant containers. DO NOT drop, strike, puncture or incinerate containers. Use Department Of Transportation (DOT) approved, DOT 4BW or DOT 4BA, refrigerant containers.

7) Never overfill refrigerant containers. The safe filling level of a refrigerant container MUST NOT exceed 60% of the container's gross weight rating. Store refrigerant containers at temperature less than 125oF (52oC).

8) R-12 refrigerant (Freon) will be sold and stored in White containers, while R-134a refrigerant will be sold and stored in 30 or 50-pound Light Blue containers.

9) R-12 and R-134a refrigerants must never be mixed, as their desiccants and lubricants are not compatible. If the refrigerants are mixed, system cross-contamination or A/C system component failure may

occur. Always use separate servicing and refrigerant recovery/recycling equipment.

10) Follow equipment manufacturer instructions of all service equipment to be used. The Material Safety Data Sheet (MSDS), provided by refrigerant manufacturer/suppliers, contains valuable information regarding the safe handling of R-12 or R-134a refrigerants.

IDENTIFYING R-134a SYSTEMS & COMPONENTS

To prevent refrigerant cross-contamination, use following methods to identify R-134a based systems and components.

Fittings & "O" Rings

All R-134a based A/C systems use 1/2" - 16" ACME threaded fittings (identifiable by square threads) and quick-connect service couplings. See Fig. 1. Besides the use of these fittings, most manufacturers will use Green colored "O" rings in R-134a systems.

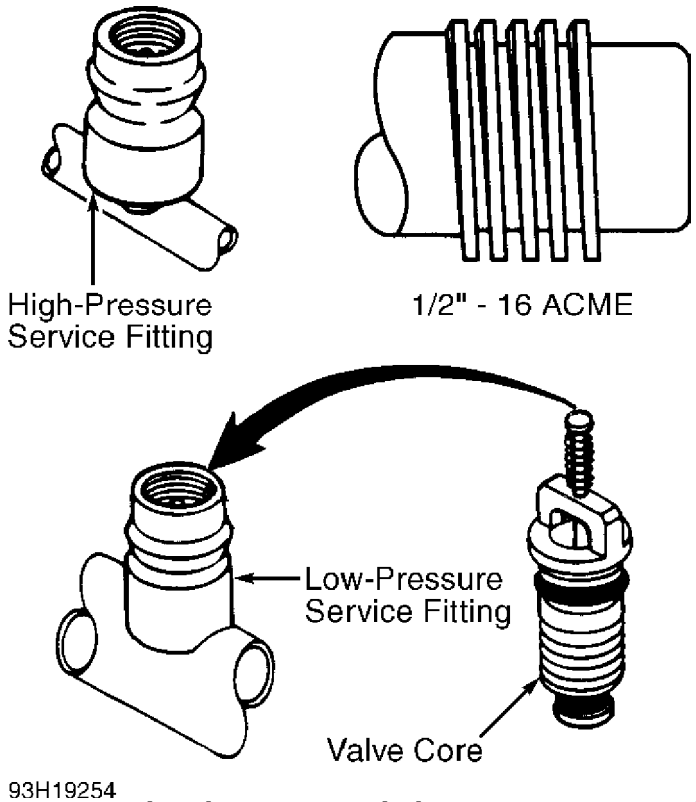

Fig. 1: R-134a Fittings & Quick Connect Service Couplings ID
Courtesy of Audi of America, Inc.

Underhood A/C Specification Labels

Most R-134a based systems will be identified through the use of Green or Light Blue underhood labels, or with R-134a refrigerant clearly printed on labels. See Fig. 2. Some manufacturers will

identify R-12 based systems with White, Red, Silver or Gold underhood labels. Before servicing an A/C system, always determine which refrigerant is being used.

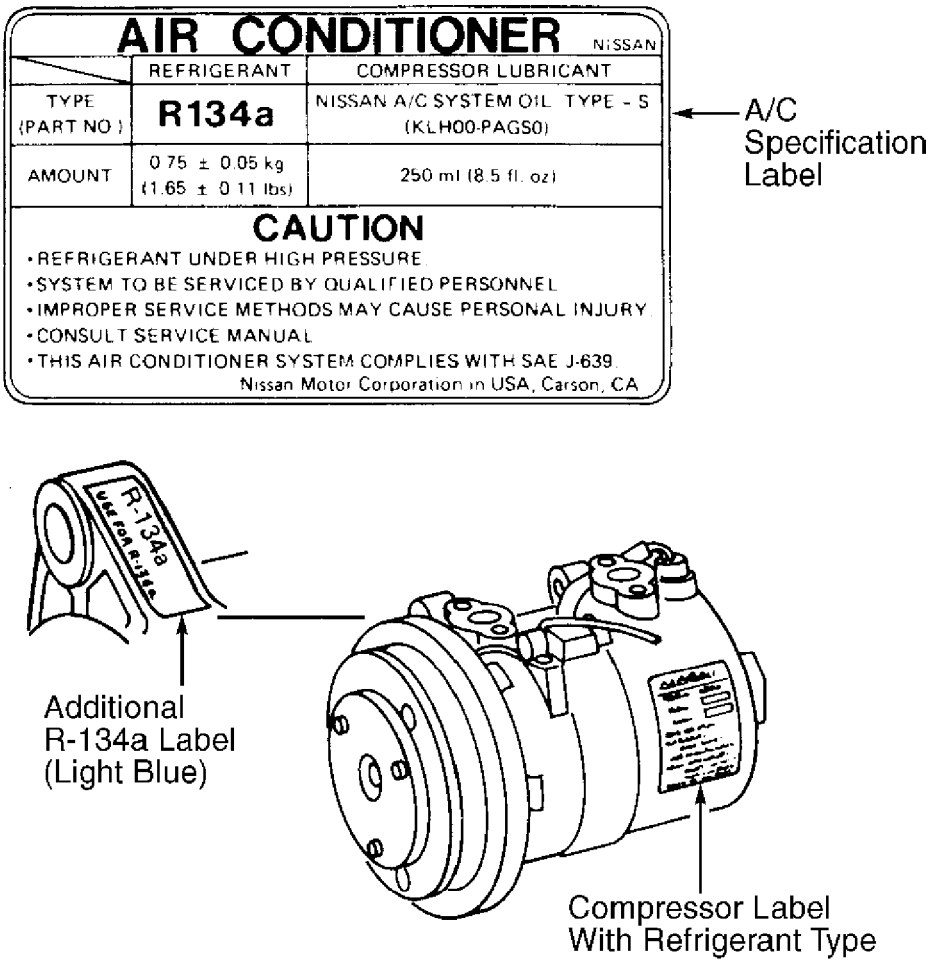

Fig. 2: Underhood A/C Specification Labels (Typical)
Courtesy of Nissan Motor Co., U.S.A.

Other Means Of Identification

Refrigerant R-134a, when viewed through a sight glass, may have a "milky" appearance due to the mixture of refrigerant and lubricating oil. As the refrigerant and oil DO NOT exhibit a "clear" sight glass on a properly charged A/C system, R-134a systems have no sight glass.

Audi, Mercedes-Benz and Volkswagen use Green bands/labels on condenser, refrigerant lines, receiver-drier and expansion valve. Lexus A/C system hoses and line connectors have a groove, a White line and "R-134a" marked on them. See Fig. 3.

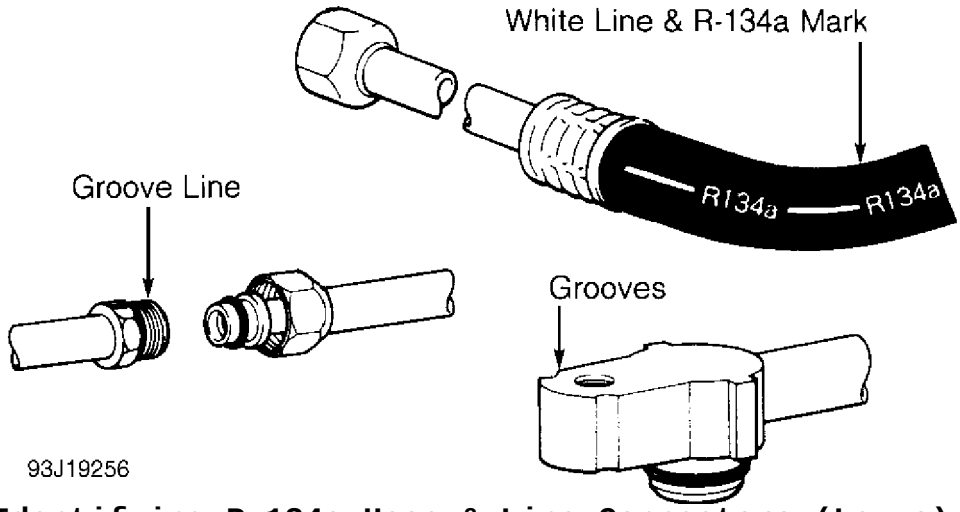

Fig. 3: Identifying R-134a Hose & Line Connectors (Lexus)
Courtesy of Toyota Motor Sales, U.S.A., Inc.

REFRIGERANT OILS

Refrigerant R-12 based systems use mineral oil, while R-134a systems use synthetic/Polyalkylene Glycol (PAG) oils. Using a mineral oil based lubricant with R-134a will result in A/C compressor failure due to lack of proper lubrication.

Use ONLY specified oil for the appropriate system and A/C compressor. Always check the underhood A/C specification label or A/C compressor label before adding refrigerant oil to A/C compressor/system. See Fig. 2. The following R-134a refrigerant oils are currently available.

Lexus
PAG Refrigerant Oil (ND-OIL 8) with 10P/10PA swashplate (piston) compressor. Synthetic Refrigerant Oil (ND-OIL 9) with through-vane (rotary vane) compressor.

Mercedes-Benz
PAG Refrigerant Oil (001 989 08 03).

Nissan
PAG Refrigerant Oil (KLH00-PAGR0) with rotary vane compressor. PAG Refrigerant Oil (KLH00-PAGS0) with piston (swashplate) compressor.

Saab
PAG Refrigerant Oil (40 74 787).

NOTE: Synthetic/PAG oils absorb moisture very rapidly, 2.3-5.6% by weight, as compared to a mineral oil absorption rate of .005% by weight.

SERVICE EQUIPMENT

Because R-134a is not interchangeable with R-12, separate sets of hoses, manifold gauge set and recovery/recycling equipment are required to service vehicles. This is necessary to avoid cross-contaminating and damaging system.

All equipment used to service systems using R-134a must meet SAE standard J1991. The service hoses on the manifold gauge set must have manual (turn wheel) or automatic back-flow valves at the service port connector ends. This will prevent refrigerant from being released into the atmosphere.

For identification purposes, R-134a service hoses must have a Black stripe along its length and be clearly labeled SAE J2196/R-134a. The low pressure test hose is Blue with a Black stripe. The high pressure test hose is Red with a Black stripe, and the center test hose is Yellow with a Black stripe.

NOTE: Refrigerant R-12 service hoses will ONLY be labeled SAE J2196.

R-134a manifold gauge sets can be identified by one or all of the following:

* **Labeled FOR USE WITH R-134a on set**
* **Labeled HFC-134 or R-134a on gauge face**
* **Light Blue color on gauge face**

In addition, pressure/temperature scales on R-134a gauge sets are different from R-12 manifold gauge sets.

SYSTEM SERVICE VALVES

SCHRADER-TYPE VALVES

NOTE: Although similar in construction and operation to a tire valve, NEVER replace a Schrader-type valve with a tire valve.

Schrader valve is similar in construction and operation to a tire valve. When a test gauge hose with built-in valve core depressor is attached, Schrader stem is pushed inward to the open position and allows system pressure to reach gauge.

If test hose does not have a built-in core depressor, an adapter must be used. Never attach hose or adapter to Schrader valve unless it is first connected to manifold gauge set.

Refrigerant R-12 Schrader-type valve cores have TV5 thread size. Refrigerant R-134a Schrader-type valve cores use M6 (Metric)

threads. R-134a valve cores can be easily identified by use of "O" rings and external spring. See Fig. 1.

SERVICE VALVE LOCATIONS

SERVICE VALVE LOCATIONS TABLE

Vehicle	High	Low
Audi	(12)	(13)
Acura	(2)	(3)
BMW	(4)	(5)
Chrysler, Eagle & Mitsubishi		
Colt, Mirage & Summit	(10)	(5)
Colt Vista & Summit Wagon	(10)	(11)
Diamante	(4)	(5)
Eclipse & Expo	(10)	(11)
Galant	(10)	(11)
Montero	(11)	(11)
Pickup & Ram-50	(10)	(11)
Precis	(10)	(10)
Stealth & 3000GT		
R-12	(1)	(1)
R-134a	(1)	(5)
Ford Motor Co.	(4)	(5)
General Motors	(12)	(12)
Geo	(4)	(5)
Honda	(4)	(5)
Hyundai		
Elantra & Scoupe	(4)	(5)
Excel & Sonata	(10)	(10)
Infiniti	(4)	(5)
Isuzu	(4)	(5)
Jaguar	(4)	(5)
Lexus	(4)	(5)
Mazda		
B2200 & B2600i	(8)	(8)
Miata, MPV Protege & 323	(4)	(5)
Navajo	(6)	(7)
All Others	(1)	(1)
Mercedes-Benz	(4)	(5)
Nissan	(4)	(5)
Porsche	(8)	(8)
Saab	(8)	(8)
Subaru		
Impreza	(1)	(1)
Legacy & Loyale	(4)	(5)
SVX	(9)	(9)

Suzuki	(4)	(5)
Toyota		
Pickup & 4Runner	(11)	(11)
All Others	(4)	(5)
Volkswagen	(4)	(5)
Volvo		
240	(4)	(5)
850	(1)	(5)
940 & 960	(14)	(14)

(1) - Information is not available from manufacturer.
(2) - On high pressure line (near top of condenser on Integra; near receiver-drier on Legend; on receiver-drier on Vigor). Use High-Side Adapter (J-25498).
(3) - On low pressure line (near battery on Integra; near right rear of engine on Legend; near compressor on Vigor).
(4) - On high pressure (discharge) hose/line.
(5) - On low pressure (suction) hose/line.
(6) - On high pressure line, between compressor and condenser.
(7) - On suction accumulator/drier.
(8) - On low and high pressure hoses, behind compressor.
(9) - On receiver/drier and low pressure hose (near compressor).
(10) - On compressor discharge hose and accumulator.
(11) - On compressor discharge and suction ports.
(12) - Front of condenser on right side.
(13) - Towards rear of compressor.
(14) - Single service valve on suction accumulator/drier.

AAAAAAAAAAAAAAAAAAAAAAAAAAAAAAAAAAAAAAAAAAAAAAAAAAAAAAAAAAAAAAAAAAAAAAAA

REFRIGERANT RECOVERY/RECYCLING

Refrigerant recovery/recycling equipment is used to remove refrigerant from vehicle's A/C system without polluting atmosphere. To remove and recycle refrigerant, connect the recovery/recycling system and follow instructions provided with the system.

The removed refrigerant is filtered, dried and stored in a tank within the recovery/recycling system until it is ready to be pumped back into the vehicle's A/C system. With refrigerant stored in the recovery/recycling system, A/C system can be opened without polluting atmosphere.

NOTE: Separate sets of hoses, gauges and refrigerant recovery/recycling equipment MUST be used for R-12 and R-134a based systems. DO NOT mix R-12 and R-134a refrigerants, as their refrigerant oils and desiccants are

not compatible. On systems with R-134a refrigerant, use Polyalkylene Glycol (PAG) wax-free refrigerant oil.

END OF ARTICLE